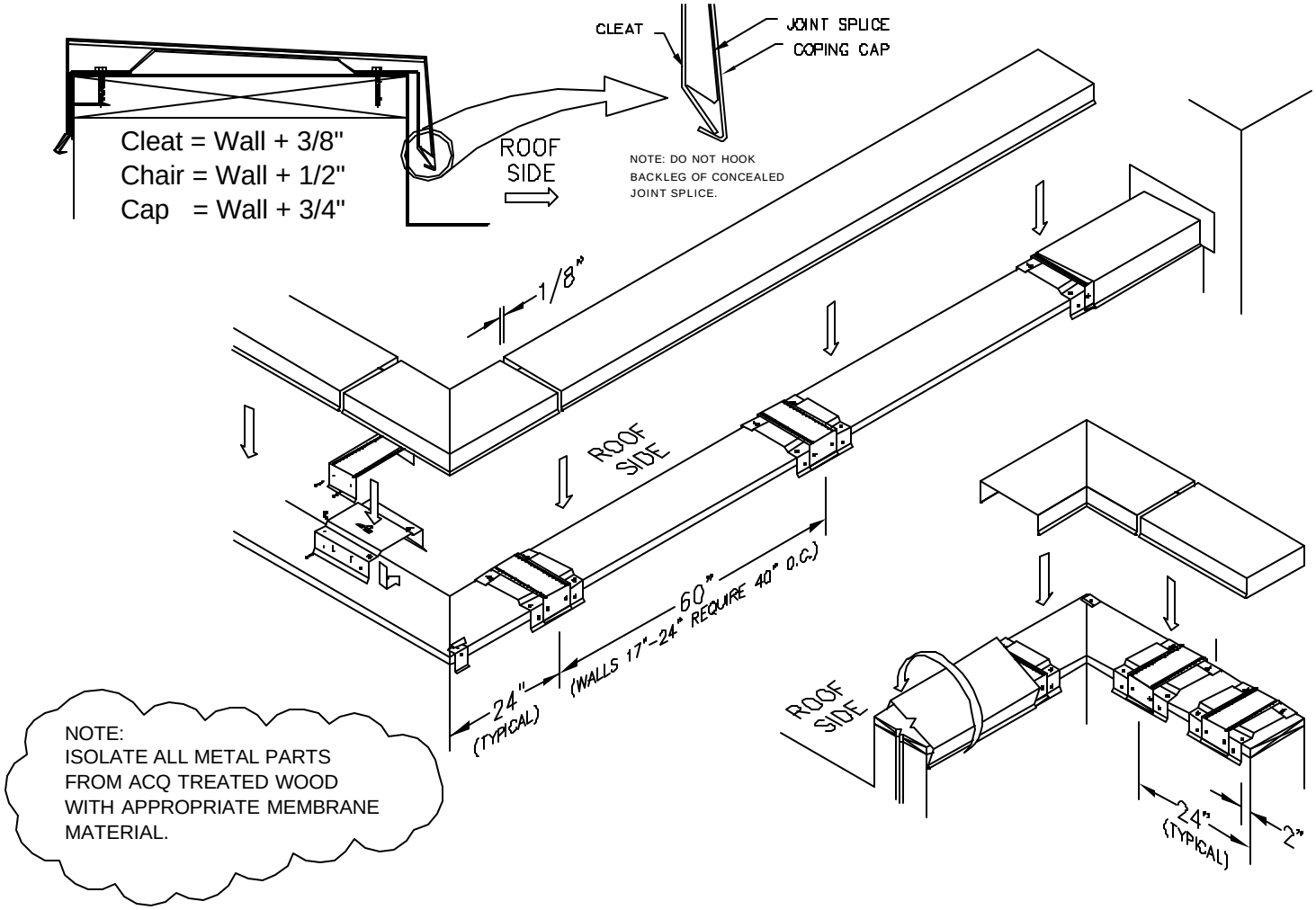

A. Anchor Cleats at Corners

Locate corner cleats with their centerline 24" from the corner of the building. (If miter legs are other than 24" adjust cleat accordingly.) Pull each cleat snugly against the face of the building. Use four (4) screw fasteners per cleat top and two (2) ring shank roofing nails in the face. Install fasteners in the center of the top slotted holes to allow for wall movement. Put two (2) nails in the face of the splice plate through the slotted holes in the cleat face.

B. Corner Support Clips

Corner support clips are to be placed at all corners to support the cap. Set the clip away from the corner approximately $\frac{1}{2}$".

C. Anchor Cleats at Wall Ends

Install the first anchor cleat approximately 2" from the wall end. Install the second anchor cleat 24" on center from the wall end. (If end cap leg is other than 24" adjust cleat accordingly.)

D. Anchor Cleats Along the Parapet

Install anchor cleats along the length of the parapet on 60" centers (Walls 17"-24" require 40" centers). At the middle of the run, adjust the location to fit a short coping length (maximum cleat spacing 60" on center for walls 6"-16" and 40" on center for walls 17"-24").

E. Installing Coping Corners

Place the concealed joint splice over the anchor cleat at each cleat location and nail into place. DO NOT HOOK BACKLEG OF JOINT SPLICE ON CLEAT. Hook the face of the corner over the outside face leg of the cleat, rotate the cap over the top of the cleats and snap the roof side leg by pressing down on the coping back leg.

F. Installing End Caps and End Terms

Install end caps and end terms (refer to Step E). End caps must be restrained from moving by securing the end cap to the cleat. Use stainless steel screws or rivets (by installer) to fasten the roof side leg.

G. Installing Coping Straight Lengths

Begin installing from the ends working inward to the center allowing an $\frac{1}{8}$" gap between the coping sections for thermal expansion ($\frac{1}{4}$" if temperature is below 40°F). There should be a cleat at each joint and at least one cleat in the middle of each ten foot section. Cut the middle piece of coping to complete the section. Every fifth 10 foot section of coping should be secured to a cleat to isolate movement within a containment zone (refer to Step F).